domix M5

PINOUT

Domotic Module for smart home & co

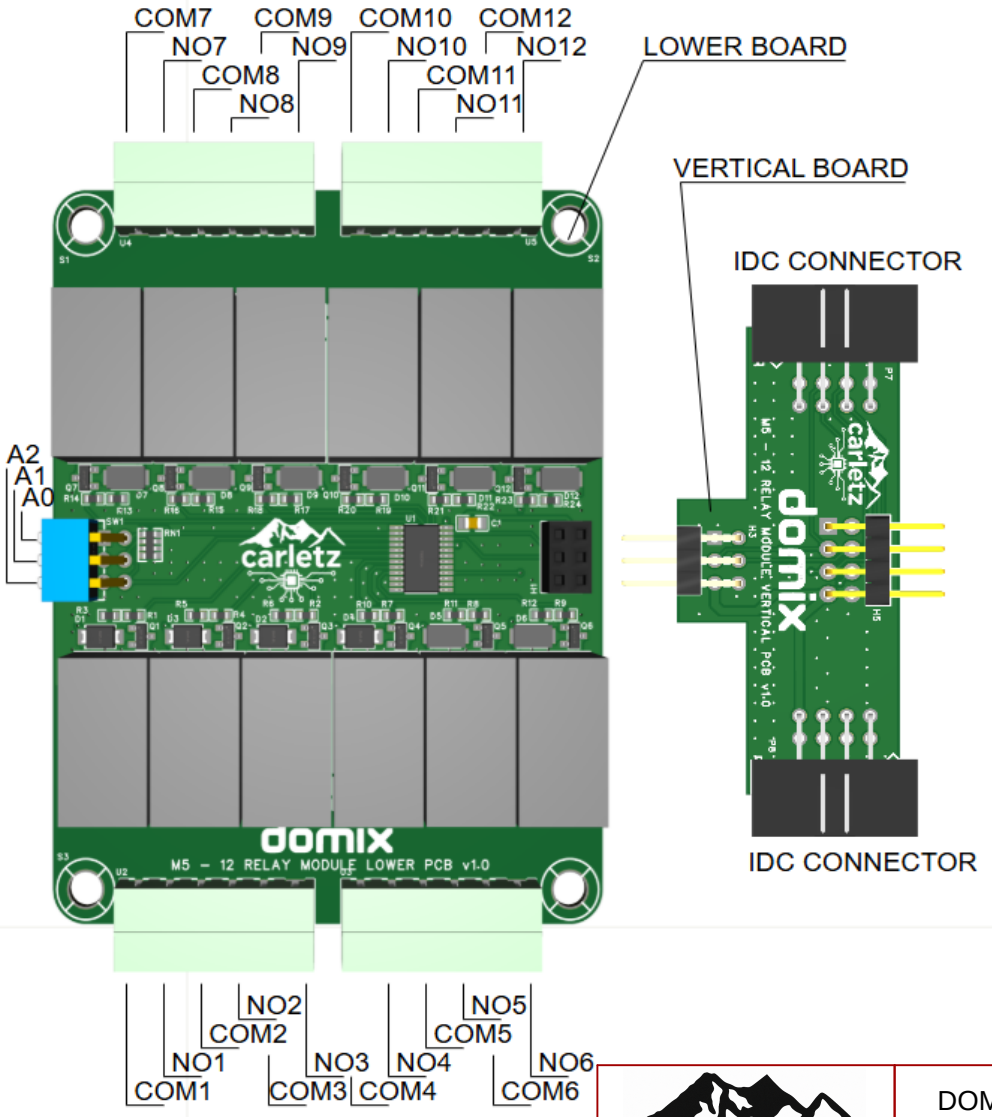

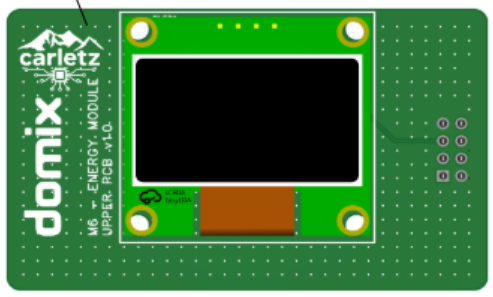

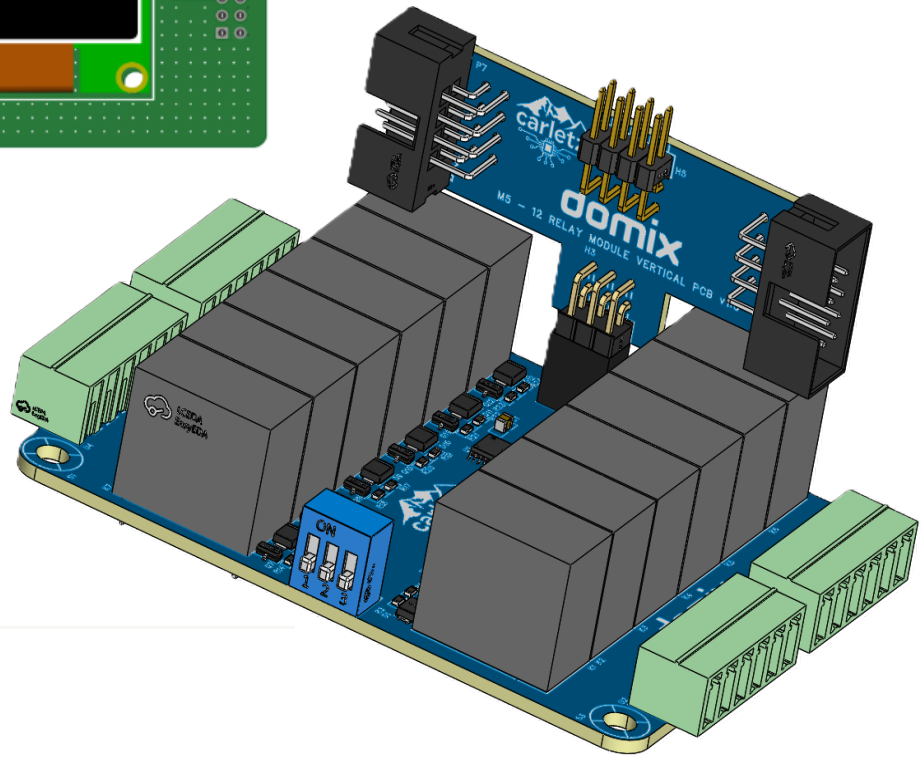

carletz	DOMIX - Domotic module for smart home & co		Create at	2026-01-29	Drawn: carletz
			Update at	2026-02-08	Reviewed: carletz
	Version	Size	Page 1 Total 3	Schematic	M5 - 12 Relay Module
	1	A4	EasyEDA	Board: M5 - 12 RELAY	Page / Description

I2C Controller

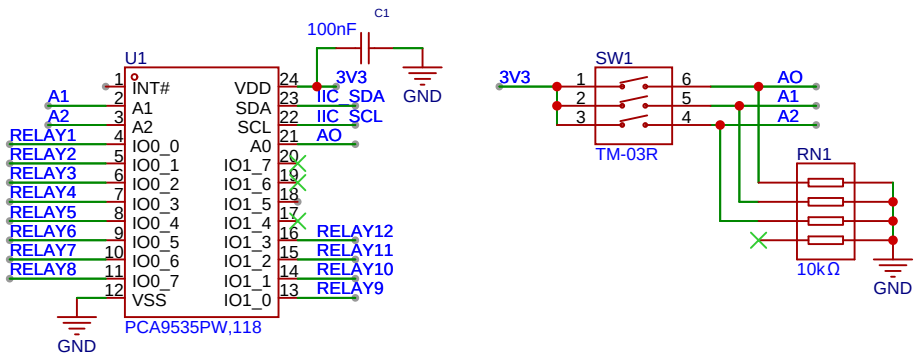

Connector & Miscellanea

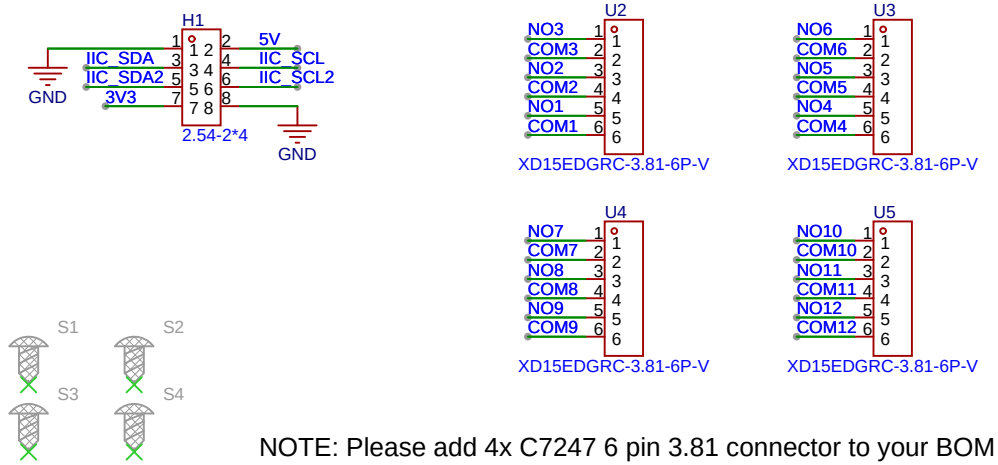

NOTE: Please add 4x C7247 6 pin 3.81 connector to your BOM

Relay 1

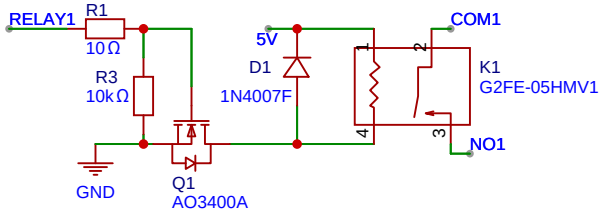

Relay 2

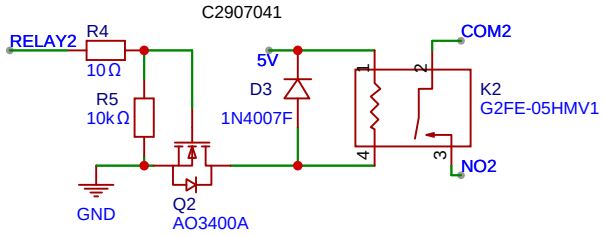

Relay 3

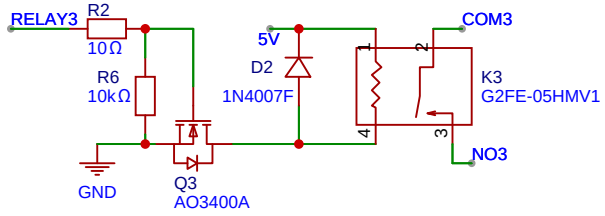

Relay 4

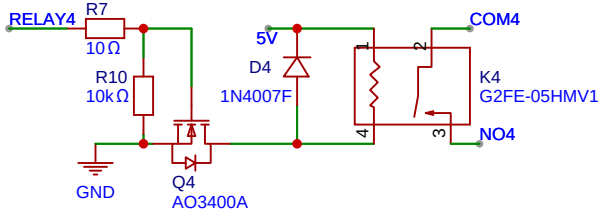

Relay 5

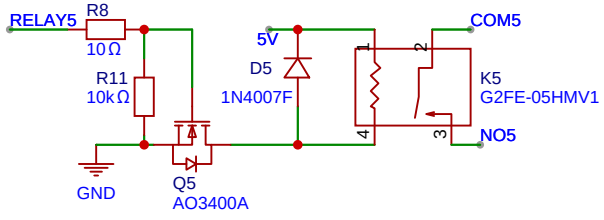

Relay 6

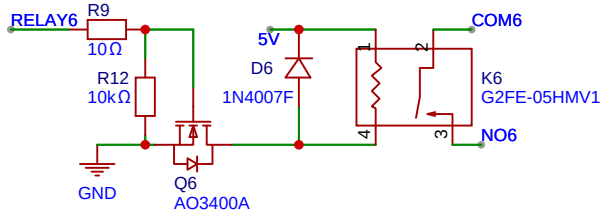

carletz	DOMIX - Domotic module for smart home & co		Create at	2026-01-29	Drawn	carletz
			Update at	2026-02-09	Reviewed	carletz
	Version	Size	Page 2 Total 3	Schematic	M5 - 12 Relay Module	
	1	A4	EasyEDA	Board	M5 - 12 RELAY	Page	I2C & Relay1-6

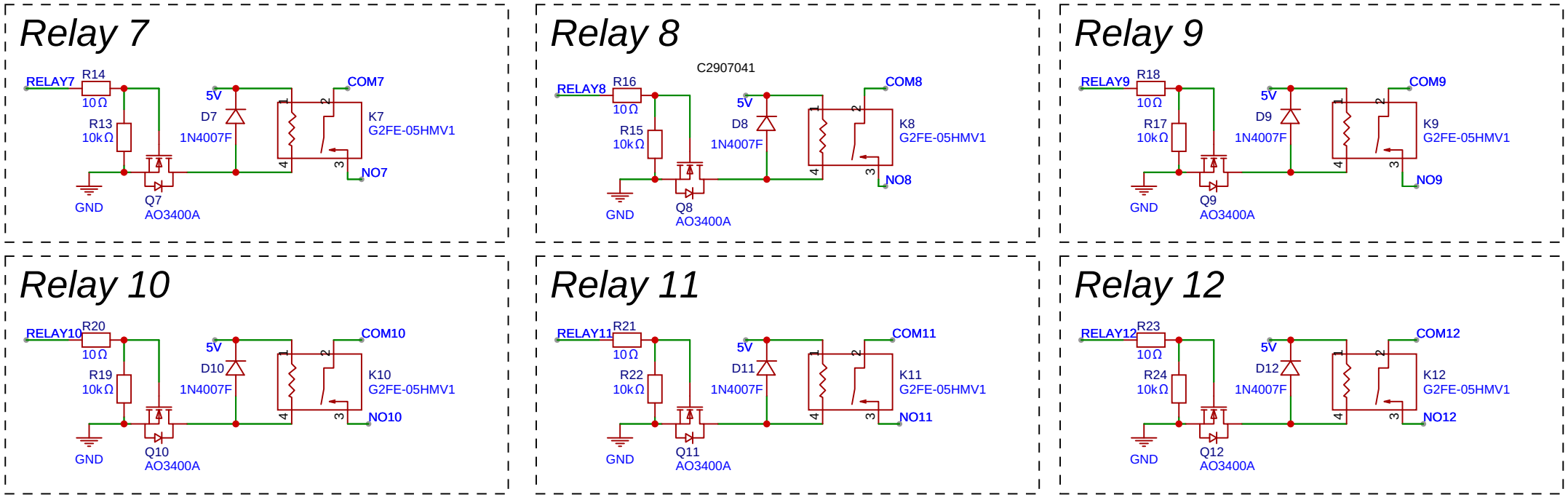

carletz	DOMIX - Domotic module for smart home & co		Create at	2026-01-29	Drawn: carletz
			Update at	2026-02-03	Reviewed: carletz
	Version: 1	Size: A4	Page 3 Total 3	Schematic	M5 - 12 Relay Module
			EasyEDA	Board: M5 - 12 RELAY	Page: Relay 7-12